SIEMENS

Infrastructure & Cities

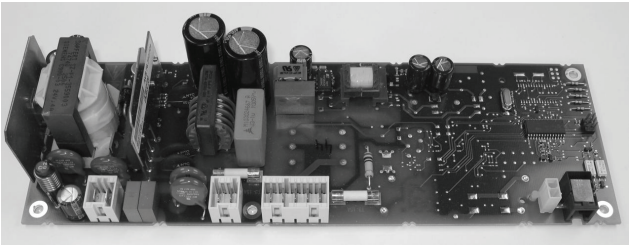

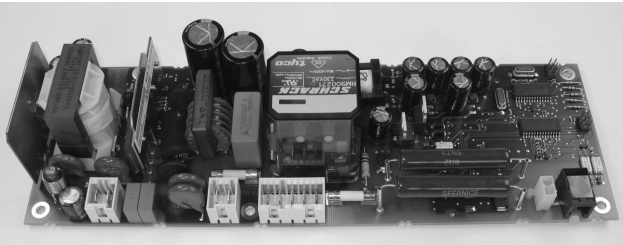

Albatros^2
Grid supervision module / PSU AVS76.39x/309
User manual

Edition 2.1

CE1U2331en_02
03.12.2012

Building Technologies

Siemens Switzerland Ltd
Infrastructure & Cities Sector
Building Technologies Division
Gubelstrasse 22
6301 Zug
Switzerland
Tel. +41 41-724 24 24
www.siemens.com/sbt

© 2009-2012 Siemens Switzerland Ltd
Subject to change

Table of contents

1 Summary 4

1.1 Type summary 4

2 Safety notes 5

2.1 Product liability 5

3 Mounting and installation 6

3.1 Regulations 6

3.2 Module AVS76.9xx 6

3.2.1 Connection terminals of AVS76.39x/309 7

3.2.2 Wiring of AVS76.390/309 to RVC32.4x0 9

3.2.3 Wiring of AVS76.392/309 to RVC32.4x0 10

4 Commissioning 11

5 Handling 12

5.1 Operation (operating elements) 12

6 Technical data 13

6.1 Grid supervision module on AVS76.39x/309 13

6.2 Power supply part on AVS76.39x/309 14

6.3 General data AVS76.39x/309 14

Index 15

1 Summary

This User Manual describes the products listed below and covers the handling and configuration of the units for readers ranging from end users to heating engineers.

Type reference(ASN)	*Name*
AVS76.390/309 series B	Power supply and grid supervision module G83
AVS76.392/309 series B	Power supply and grid supervision module ENS

The product is a combination of a 24Vdc power supply and a grid supervision module according to different standards.

The power supply is a switch-mode power supply with a rated nominal current of 3A at 24V

The grid supervision module monitors the mains supply according to the national settings and will indicate by a signal output an unhealthy mains supply. The signal can be used to disconnect a generator from the grid.

The ENS function contains a redundant supervision circuit with additional impedance measurement. A Power Relay will disconnect mains within the module to fulfil the need for a second disconnection contact.

1.1 Type summary

Block diagram of the versions

G83 function

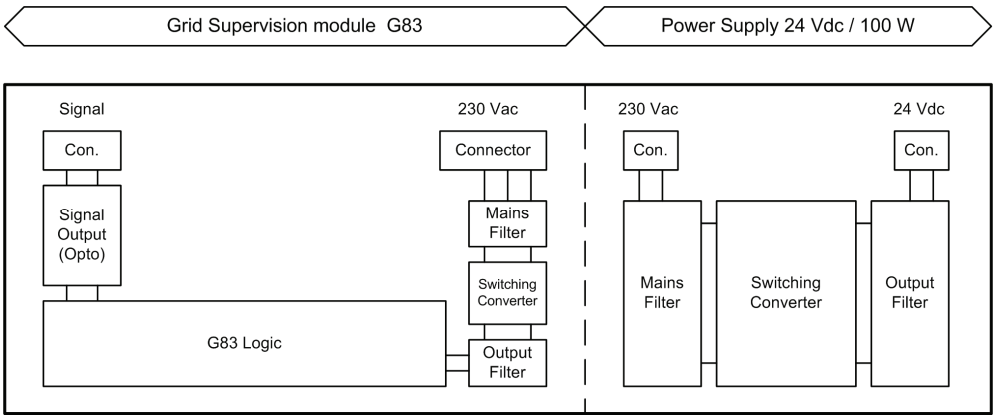

ENS function

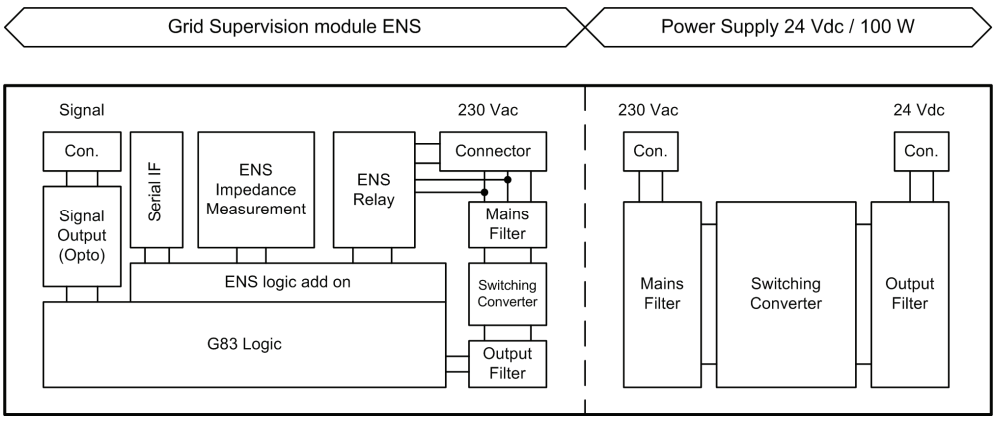

2 Safety notes

2.1 Product liability

- The products may only be used in building services plant and applications as described in this document
- When using the products, all requirements specified in chapters "Handling" and "Technical data" must be satisfied
- Local regulations (for installation, etc.) must be complied with
- Do not open the units if cased. If not observed, Siemens warranty will be invalidated

3 Mounting and installation

3.1 Regulations

Electrical installation

- The power supply must be turned off prior to installation
- The connections for mains and low-voltage are separated
- Wiring must be made in compliance with the requirements of safety class II. This means that sensor and mains cables must not be run in the same duct
- Wiring must be checked for correct functionality before connecting the generator to the grid.

3.2 Module AVS76.9xx

Planning

- Air circulation around the unit must be ensured, allowing the unit to emit the heat produced by it.
- The unit is designed conforming to the directives for safety class II devices and should be mounted in compliance with these regulations
- Clearances to conducting enclosure parts must be according to regulations
- Power to the unit may only be supplied after it is installed. If this is not observed, there is a risk of electric shock near the terminals and through the cooling slots
- The unit must not be exposed to dripping water
- Permissible ambient temperature when mounted and when ready to operate: 0...55 °C
- Power cables must be clearly segregated from low-voltage lines observing a distance of at least 100 mm
- The unit must be installed with the PCB in a vertical position and with the connectors on the top edge of the PCB. Other positions are not allowed
- An enclosure around the fitted PCB must allow enough air circulation the heat produced by it

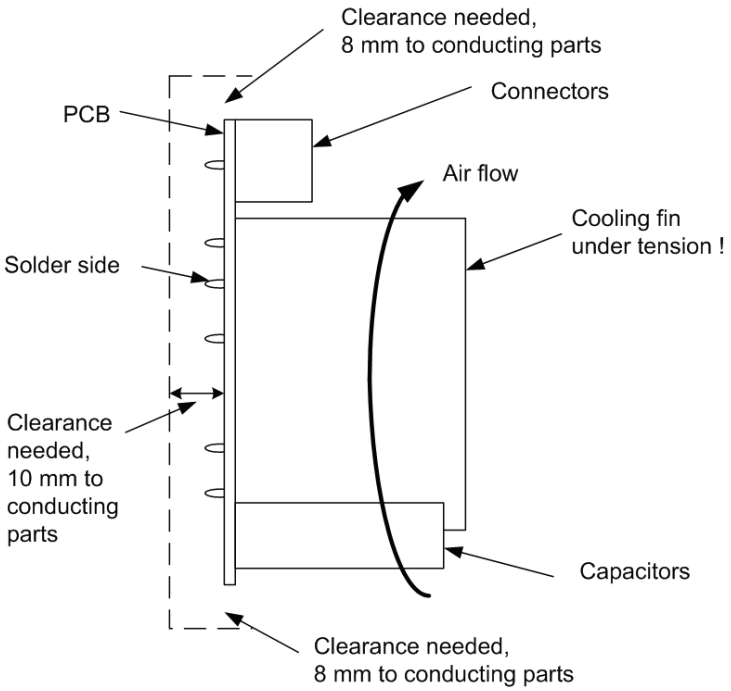

Dimensions

Dimensions in mm

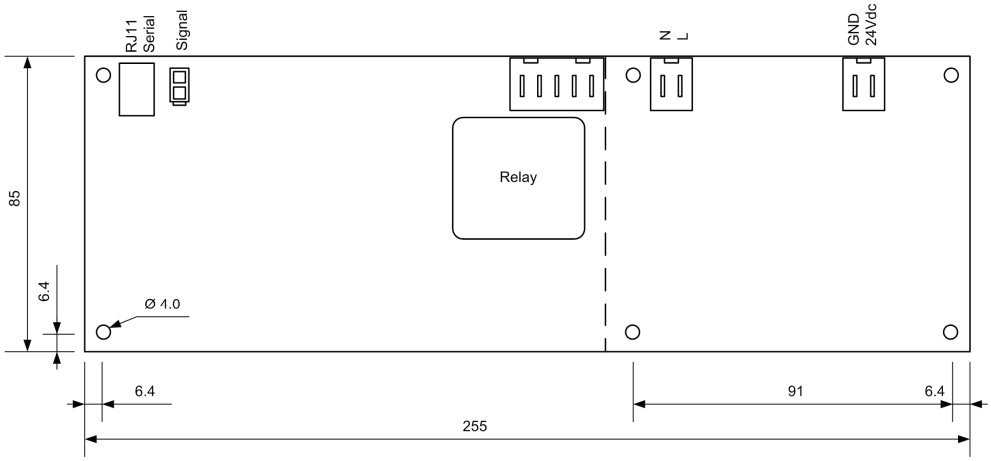

	L	*W*	*H*
AVS76.390/309	255	85	48
AVS76.392/309	255	85	55

3.2.1 Connection terminals of AVS76.39x/309

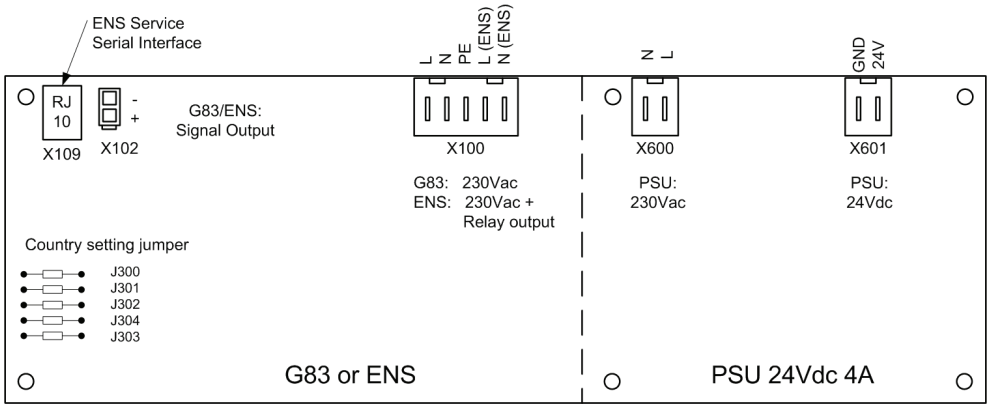

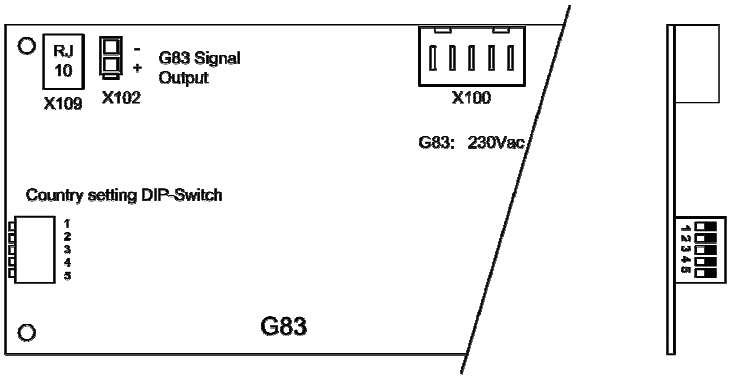

Terminal markings

Mains voltage GSM

	Use	*Terminal*	*Type of connector*
N	Appliance Neutral (ENS version)	X100, 1	TYCO: 2-928247-5
L	Appliance Line (ENS version)	X100, 2	
⏚	Grid Protective earth	X100, 3	
N	Grid Neutral	X100, 4	
L	Grid Line	X100, 5	

Low voltage GSM

	Use	*Terminal*	*Type of connector*
–	Signal –	X102, 1	Molex mini Fit Jr.
+	Signal +	X102, 2	

	Use	*Terminal*	*Type of connector*
	RXD +	X109, 1	RJ10
	RXD –	X109, 2	
	TXD +	X109, 3	
	TXD –	X109, 4	

Mains voltage PSU

	Use	*Terminal*	*Type of connector*
L	Grid Line	X600, 1	Lumberg: 3623 02K02
N	Grid Neutral	X600, 2	Tyco: 0-928247-2

Low voltage PSU

	Use	*Terminal*	*Type of connector*
24V	24 Vdc	X601, 1	Lumberg: 3623 02K46
GND	GND	X601, 2	(Tyco: 5-969484-1)

3.2.2 Wiring of AVS76.390/309 to RVC32.4x0

G83 version

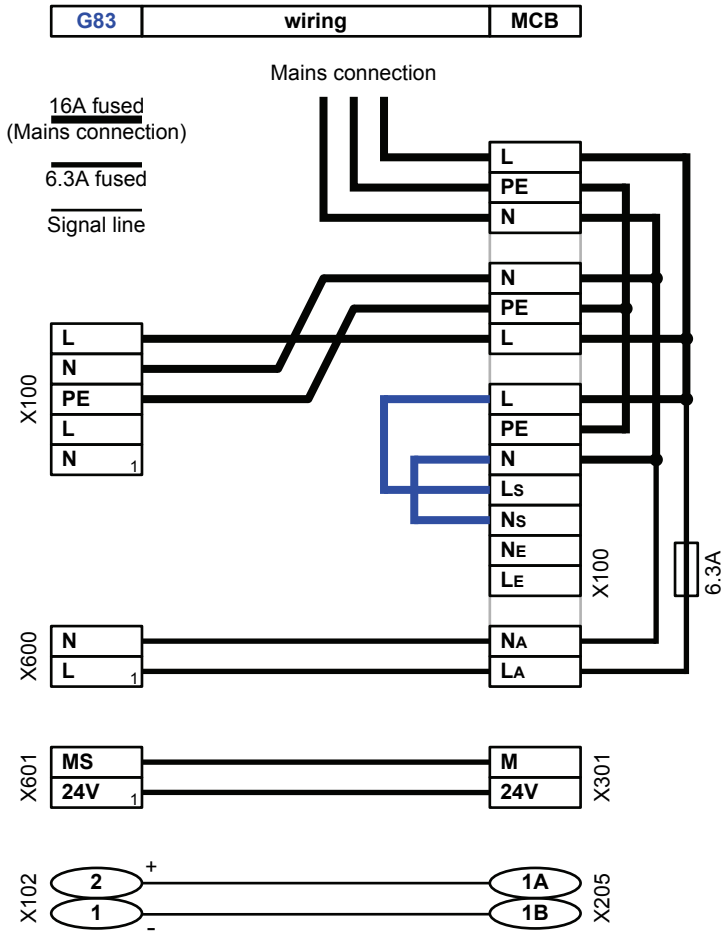

Twisted wires are recommended.

3.2.3 Wiring of AVS76.392/309 to RVC32.4x0

ENS version

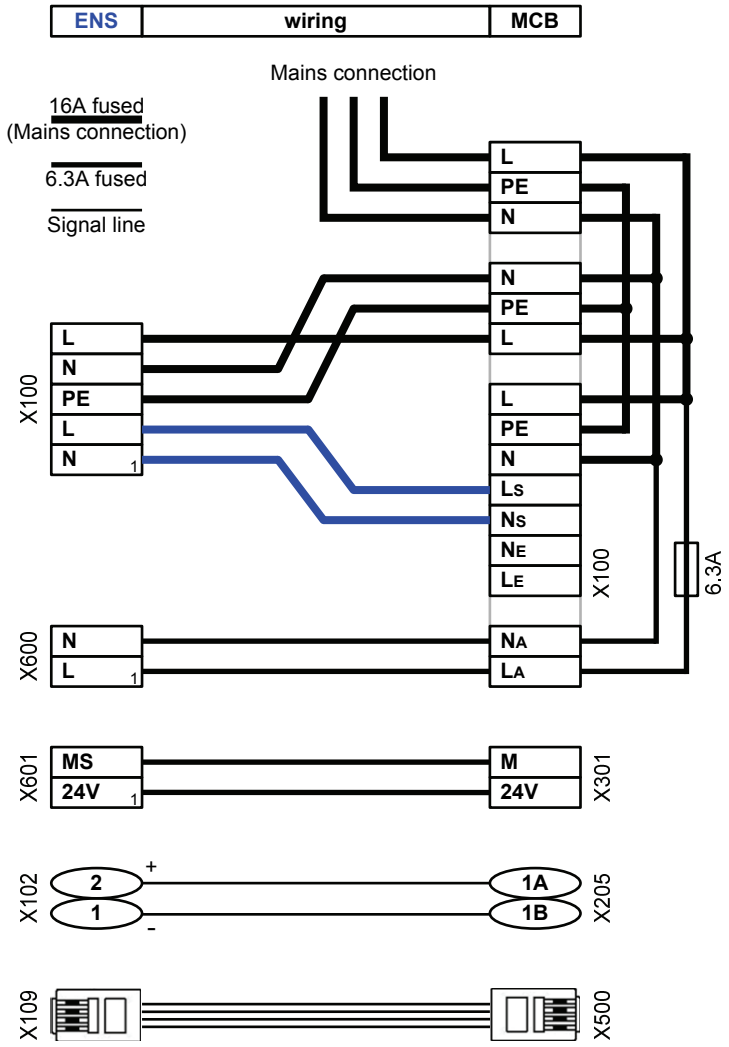

Twisted wires are recommended.

Parallel operation

For connection of more then one unit equipped with AVS76.39x (ENS) we recommend to use for each unit an one phase.
Using more then one ENS unit on the same location and on the same phase may increase switch off occurrence.
It is recommended to use a low impedance connection to the Mains. The impedance must be lower then 1 Ohm.

4 Commissioning

Prerequisites

To commission the units, the following steps must be carried out:

- Prerequisite is correct mounting and correct electrical installation

The Country setting is done with the DIP-switches or by cutting the appropriate Jumpers on the PCB (See 3.2.1 for location).
The grey marked values are limited by engine protection values.

Configuration

Country configurations: AVS76.390/309

Country	DIP-Switch setting	▲ voltage [V], [s]		▼ voltage [V], [s]		▲ frequency [Hz], [s]		▼ frequency [Hz], [s]	
Czech R	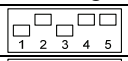	264	0.2	196	0.2	50.5	0.2	49.5	0.2
Denmark		253	2.0	196	10	51.0	0.2	47.0	0.2
Finland	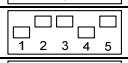	253	1.5	196	5.0	51.0	0.2	48.0	0.2
Ireland	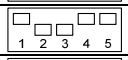	253	0.5	207	0.5	50.5	0.5	48.0	0.5
UK (default)		264	1.5	207	1.5	50.5	0.5	47.0	0.5
NL	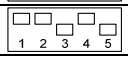	253	2.0	184	2.0	50.5	0.5	49.5	0.5

Country configurations: AVS76.392/309

Country		DIP-Switch setting	▲ voltage [V], [ms]		▼ voltage [V], [ms]		▲ frequency [Hz], [ms]		▼ frequency [Hz], [ms]	
Austria	ENS	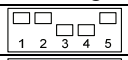	264.0	99	184.0	99	51.00	100	47.00	100
France	ENS	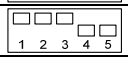	264.0	99	184.0	99	50.20	100	47.50	100
Germany / Switzerland	ENS	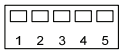	264.0	99	184.0	99	50.28 / 50.37	100	47.50	100
Belgium	ENS	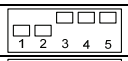	262.0	99	187.0	99	51.40	100	47.60	100
Italy	ENS	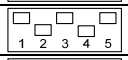	264.0	99	196.0	99	50.50	40	49.50	40
Czech R	G83	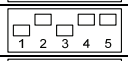	264.0	138	196.0	138	50.50	140	49.50	140
Denmark	G83		253.0	10000	207.0	9939	52.00	140	47.50	140
Finland	G83	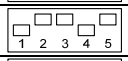	253.0	1440	196.0	4938	51.00	140	48.00	440
Ireland	G83	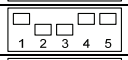	253.0	438	207.0	438	50.50	440	48.00	440
UK	G83		264.0	1440	207.0	1440	50.50	440	47.00	440
NL	G83	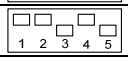	253.0	1938	184.0	1938	51.00	440	48.00	440

Engine protection: AVS76.390/309 and AVS76.392/309 for 50 Hz setting

Stage	over voltage [V]		under voltage [V]		over frequency [Hz]		under frequency [Hz]	
1st	260	65 ms	184	65 ms	50.5	65 ms	49.5	65 ms
2nd	280	35 ms	140	15 ms	52.7	25 ms	47.3	25 ms
3rd	300	15 ms						

Operating state

To facilitate commissioning and fault tracing, the controller RVC32 connected to AVS76 allows input tests to be made. The current operating state can be checked on operating page “Diagnostic generator“ Line: 8220; G83/ENS, the Status of the output is displayed.

⚠ As the output is polarity sensitive, the proper switching of the signal output must be checked, before use with the running generator.

5 Handling

5.1 Operation (operating elements)

Operating elements AVS76.39x

No handling elements on the unit.

6 Technical data

6.1 Grid supervision module on AVS76.39x/309

Power supply	Mains	AC 230 V
	Rated frequency	50 Hz
	Max. power consumption	AVS76.390/309: 0.8 W AVS76.392/309: 2.5 W
	Fusing of supply lines	max. 16 AT
	Internal fusing	3.15 A
	Inrush current	15 A
Wiring of terminals	Power supply	RAST 5 connection system
	Output	Molex Mini-Fit, Jr. 2 pole
Function	AVS76.390/309	Grid supervision function according to Recommendation G83 with different country settings, Signal output to external disconnection relay
	AVS76.392/309	Grid supervision function according to VDE AR-N 4105, EN 50438 with different country settings, redundant signal generation with signal output to external and internal disconnection relays
Output	Signal output	Opto decoupled, potential free, **polarity sensitive** Voltage: < 30 Vdc Current: < 100 mA
Internal Relay	Contact rating (AVS76.392/309 only)	> 10 A Basic isolation over open contacts
	Switching behaviour internal relay	Internal relay opens delayed to signal relay
Interface	Serial service interface	Opto decoupled on AVS76.39x/xxx Connector: RJ10

6.2 Power supply part on AVS76.39x/309

Power supply	Rated voltage	AC 230 V
	Input voltage range	170 – 270 Vac
	Rated frequency	50 / 60 Hz
	Max. power consumption	115 W at rated output
	Fusing of supply lines	max. 16 AT
	Internal fusing	3.15 A
	Inrush current	15A
Wiring of terminals	Power supply and outputs	RAST 5 connection system
	Earth connection	Same Earth connection used as grid supervision module
Output	Voltage Factory setting (no load)	24 Vdc (±1%)
	Output Current (nominal)	3 A
	Output characteristics	Current limiting below 6A
	Buffer time	> 40 ms at U_{in} = 230 Vac and nominal load

6.3 General data AVS76.39x/309

Degree of protection and safety class	Degree of protection EN 60529	IP00	
	Safety class to DIN VDE 0106 part 1 (IEC 60536/ DIN EN 61140)	safety class I (with ground wire) after correct installation	
	Degree of contamination	normal contamination	
Standards, safety, EMC, etc.	CE conformity to		
	Low-voltage directive	2006/95/EC	
	Electrical safety	EN 60335-1 VDE AR-N 4105, EN 50438	
Climatic conditions	For devices without batteries:		
	Storage to EN 60068-2-1, -2, -3	temperature –20...70 °C	
	Transport to EN 60068-2-1, -2, -3	temperature –20…70 °C	
	Operation to EN 60068-2-14	temperature 0…55 °C (no condensing)	
Mounting	Orientation	Vertical PCB with connectors on top	
	Ventilation needs	Free convection cooling needed Case has to be designed with suitable ventilation	
	Thermal Design Power in variation output load on PSU	@ 2A @ 3A @ 4A	11 W 15 W 16 W
Dimensions	Length x Width: Height:	255 x 85 mm AVS76.390/309: AVS76.392/309:	 48 mm 55 mm
Weight	Weight (excl. packaging)	AVS76.390/309: AVS76.392/309:	350 g 470 g

Index

C
commissioning 11

O
operation 12

P
product liability 5

R
regulations 6

S
safety notes 5
summary.....4

T
technical data 13
type summery.....4

Siemens Switzerland Ltd
Infrastructure & Cities Sector
Building Technologies Division
Gubelstrasse 22
6301 Zug
Switzerland
Tel. +41 41-724 24 24
www.siemens.com/sbt

© 2009-2012 Siemens Switzerland Ltd
Subject to change